MERCURY (50 (4-STROKE))
Serial Nbr Range: 0P017000 THRU 0P094499 (BEL)

SWIVEL BRACKET

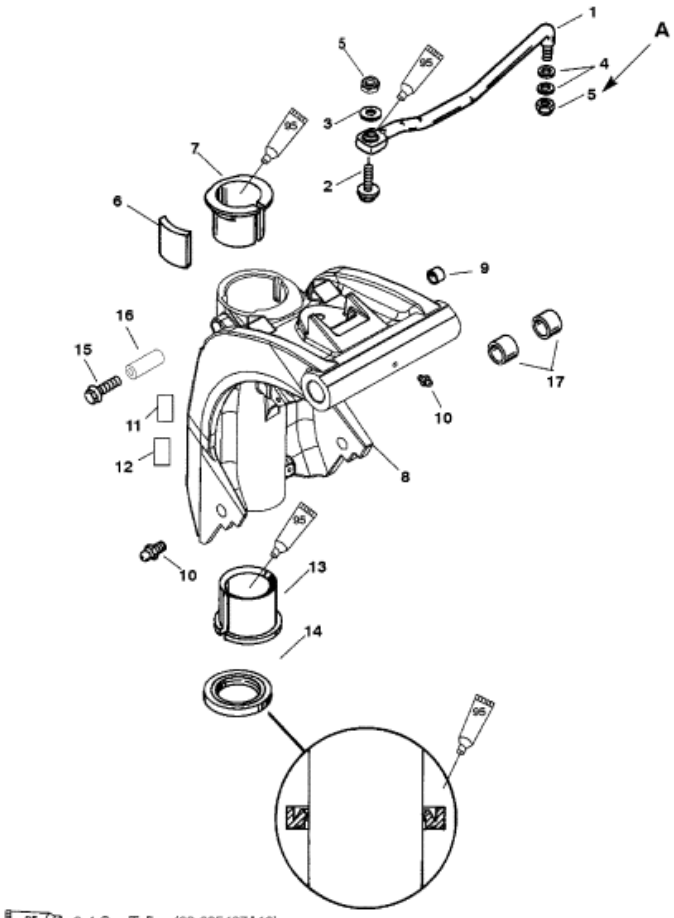

95 2-4-C w/Teflon (92-825407A12)

A = TORQUE NUT 120 LB. (13.5 N_M) AND THEN BACK OFF 1/4 TURN.

221A

Parts List

Ref	Class	Part	Description	Qty	Comment	Footnote
1		19608 1	LINK ROD	1	(NON HANDLE)	
2	10	823919	SCREW (1-1/2 IN.)	1	(NON HANDLE)	
3	12	71970	WASHER	1	(NON HANDLE)	
4	12	37828	WASHER	2	(NON HANDLE)	
5	11	34863	NUT (.375-24)	2	(NON HANDLE)	
6		822397	PUCK	1	(NON HANDLE)	
7	23	821771 1	BUSHING	1		
8	1401	850066A 1	SWIVEL BRACKET	1	(BLACK)	
8	1401	850066A 2	SWIVEL BRACKET	1	(GRAY)	
9	23	19606	BEARING	2		
10	22	74036	GREASE FITTING	2		
11	37	823701 1	DECAL-CO-PILOT	1		
12		NSS	DECAL-SERIAL OVERLAMINATE	1		
13	23	821777	BUSHING (LOWER)	1		
14	26	822404	SEAL	1		
15	10	40089 10	SCREW (M8 X 10)	1	(HANDLE)	
15	10	40011149	SCREW (M8 X 25)	1	(NON HANDLE)	
16		828245 1	SEAL	1	(NON HANDLE)	
17	23	823507	BUSHING	2	(NON-BIGFOOT)	