MODEL BF75 AND BF90
([75HP AND 90 HP] REMOTE CONTROL)

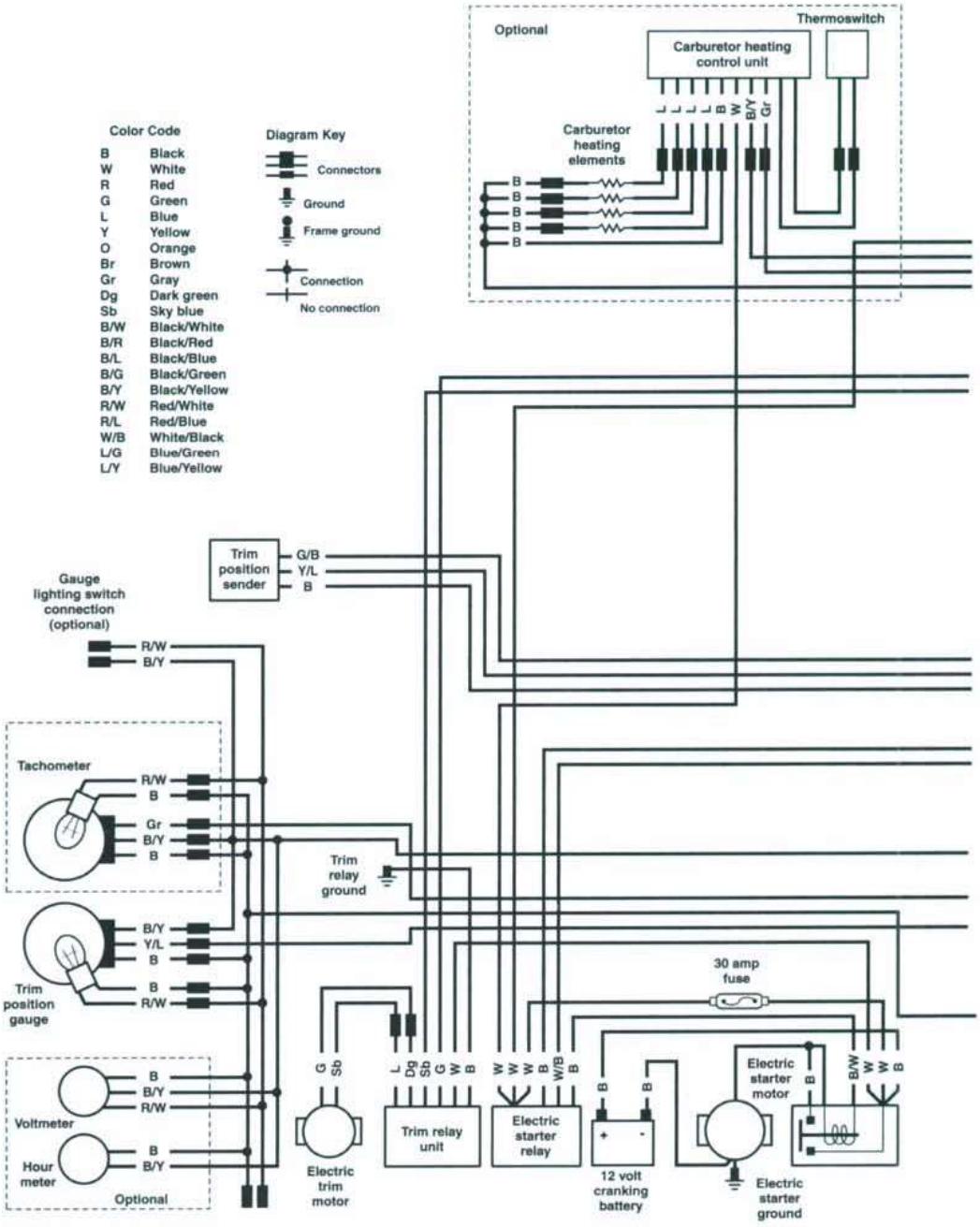

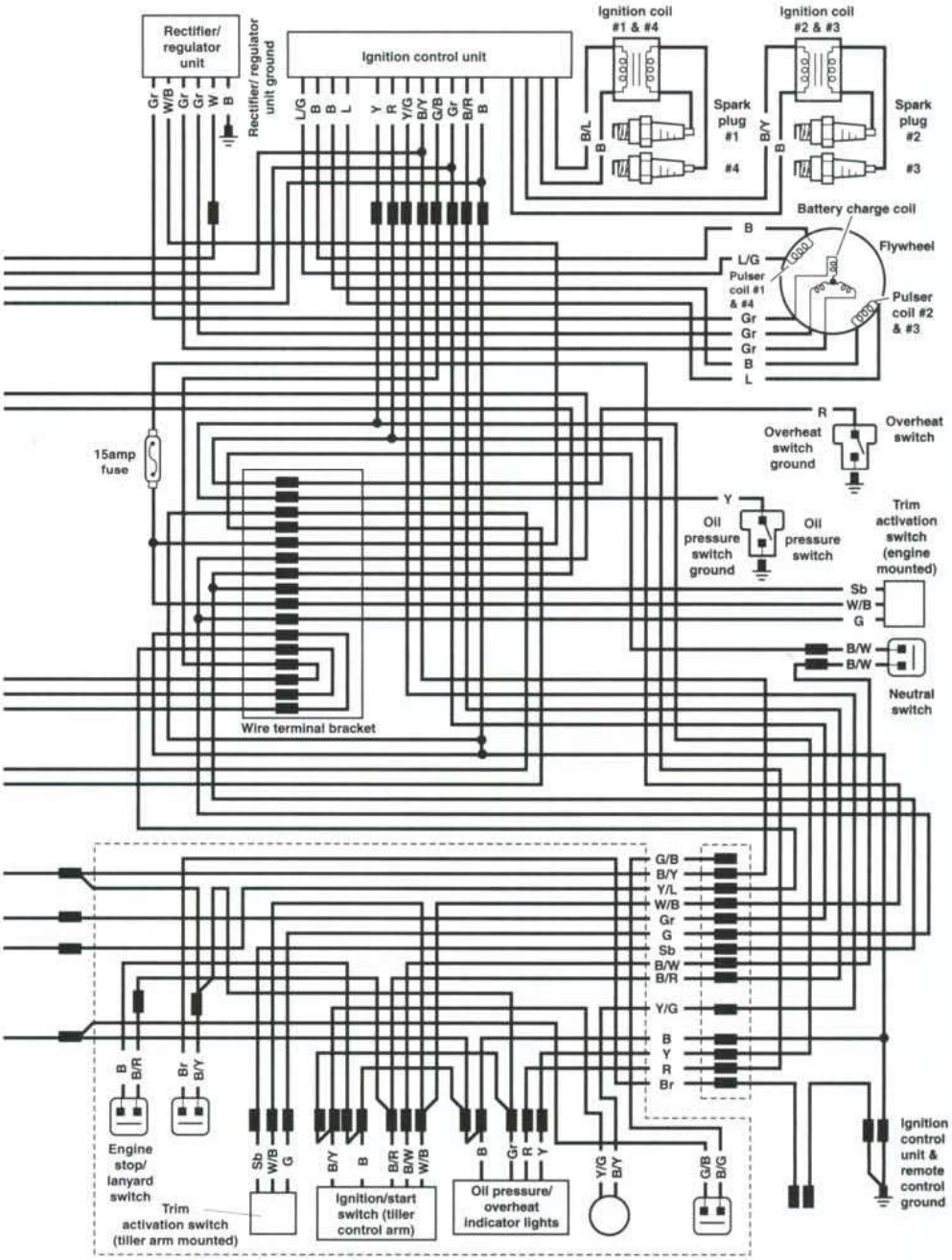
Rectifier/ regulator unit
Rectifier/ regulator unit ground
Ignition control unit
Ignition coil #1 & #4
Ignition coil #2 & #3
Spark plug #1
Spark plug #2
#4
#3
Battery charge coil
Flywheel
Pulser coil #1 & #4
Pulser coil #2 & #3
15amp fuse
Overheat switch
Overheat switch ground
Oil pressure switch ground
Oil pressure switch
Trim activation switch (engine mounted)
Neutral switch
Wire terminal bracket
Engine stop/ lanyard switch
Trim activation switch (tiller arm mounted)
Ignition/start switch (tiller control arm)
Oil pressure/ overheat indicator lights
Ignition control unit & remote control ground