50-70 HP (THREE-CYLINDER) TILLER HANDLE ELECTRIC START/1996-2003 (ED-ST) MODELS

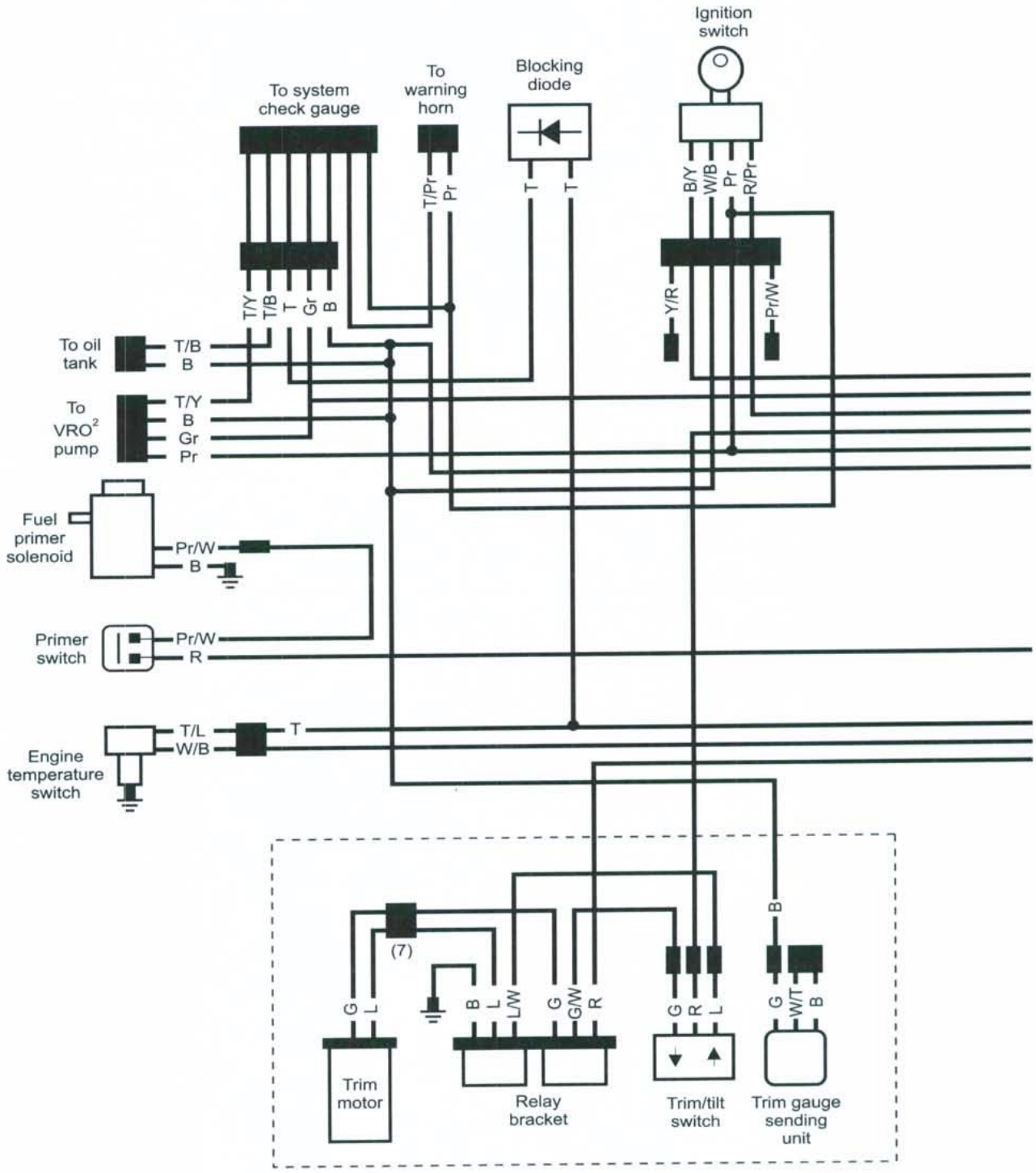

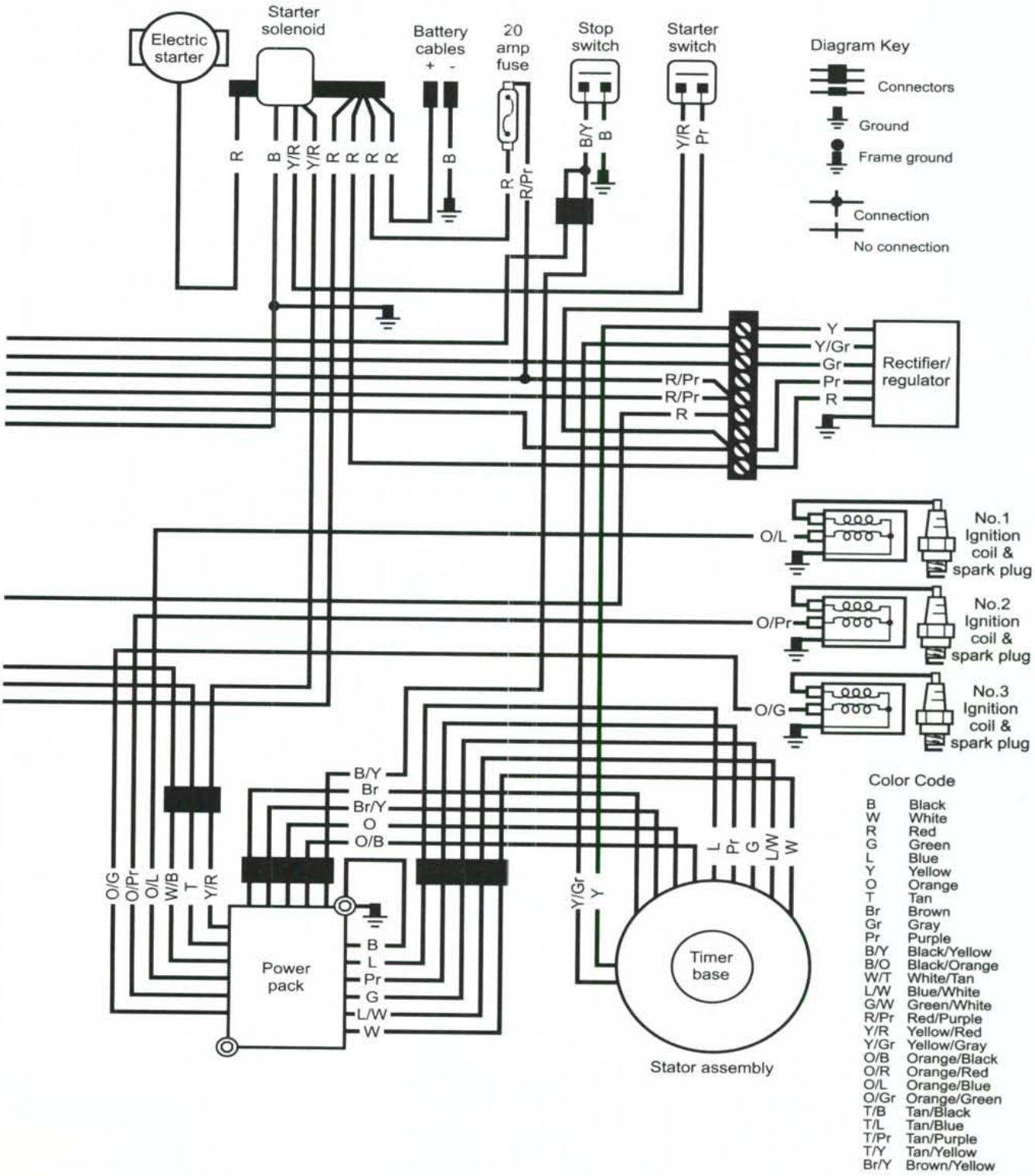
Electric starter
Starter solenoid
Battery cables
+ -
20 amp fuse
Stop switch
Starter switch
Diagram Key
Connectors
Ground
Frame ground
Connection
No connection
R
B
Y/R
Y/R
R
R
R
R
B
R
R/Pr
B/Y
B
Y/R
Pr
Y
Y/Gr
Gr
Pr
R
Rectifier/ regulator
R/Pr
R/Pr
R
O/L
No.1 Ignition coil & spark plug
O/Pr
No.2 Ignition coil & spark plug
O/G
No.3 Ignition coil & spark plug
B/Y
Br
Br/Y
O
O/B
O/G
O/Pr
O/L
W/B
T
Y/R
Power pack
B
L
Pr
G
L/W
W
Y/Gr
Y
L
Pr
G
L/W
W
Timer base
Stator assembly
Color Code
B Black
W White
R Red
G Green
L Blue
Y Yellow
O Orange
T Tan
Br Brown
Gr Gray
Pr Purple
B/Y Black/Yellow
B/O Black/Orange
W/T White/Tan
L/W Blue/White
G/W Green/White
R/Pr Red/Purple
Y/R Yellow/Red
Y/Gr Yellow/Gray
O/B Orange/Black
O/R Orange/Red
O/L Orange/Blue
O/Gr Orange/Green
T/B Tan/Black
T/L Tan/Blue
T/Pr Tan/Purple
T/Y Tan/Yellow
Br/Y Brown/Yellow